WLC 6450A

Waterline Controls®

Dual Fill Control with Low and High Alarm

Internal Relays (N.O.) are rated 30 amps at 250VAC.

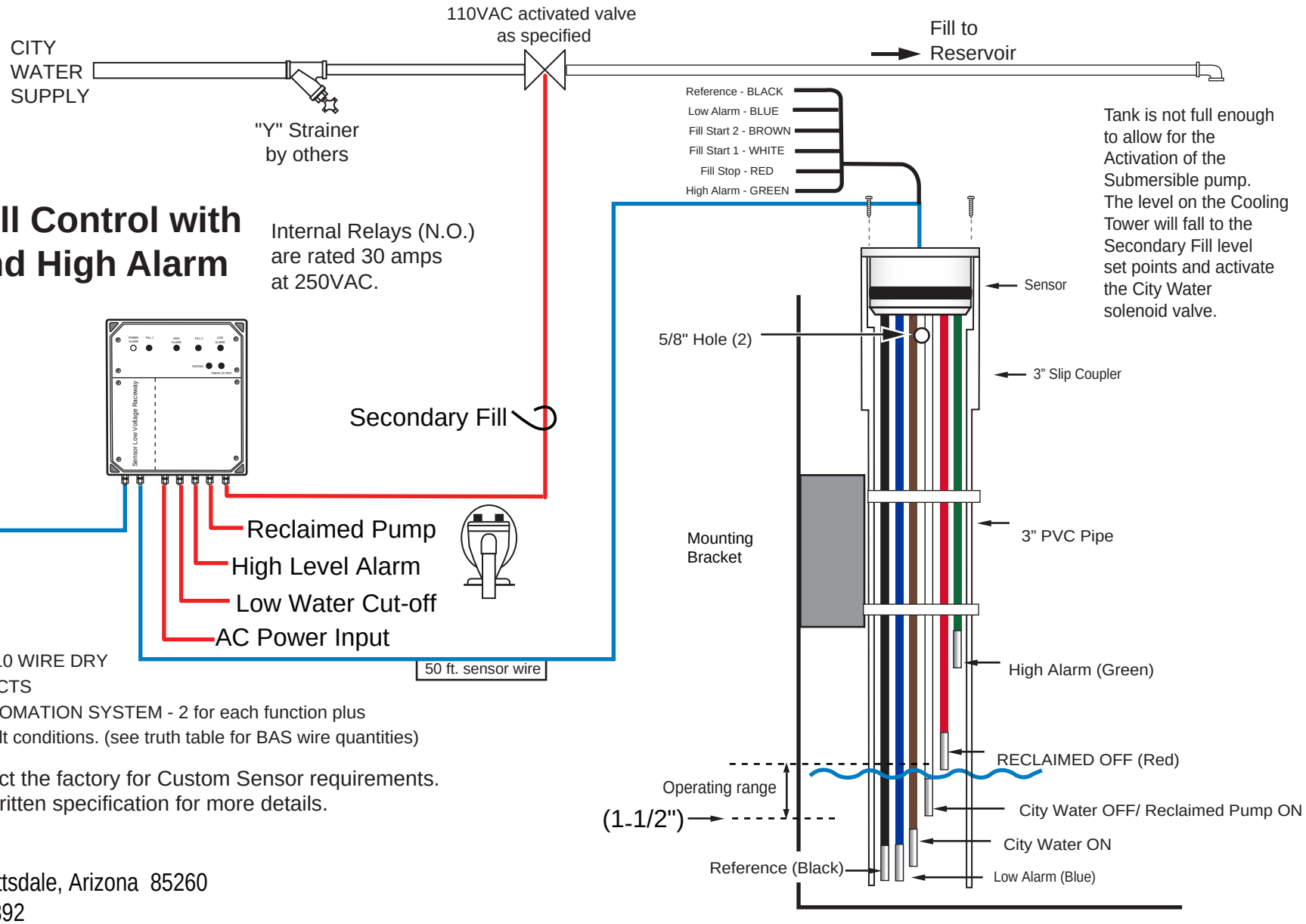

* Contact the factory for Custom Sensor requirements.
* See written specification for more details.

Waterline Controls
P.O. Box 12544 Scottsdale, Arizona 85260
Toll Free: 888-905-1892
Email: info@waterlinecontrols.com • www.waterlinecontrols.com

6450A - 050616

1. The 3" PVC Pipe needs to be at least 2" longer than the longest Sensor tip.
2. Adjustment occurs by moving the 3" PVC Pipe up or down and tightening the clamp so it rests on the Custom Fitting.